RA7x/SA7x Pocket Reference Guide

Order Number EK–RSA7X–PG–002

This guide contains quick-reference information for RA7x disk drives (RA70, RA71, RA72, and RA73) and SA7x enclosures.

Digital Equipment Corporation

August 1992

The information in this document is subject to change without notice and should not be construed as a commitment by Digital Equipment Corporation. Digital Equipment Corporation assumes no responsibility for any errors that may appear in this document.

Possession, use, duplication, or dissemination of the software described in this documentation is authorized only pursuant to a valid written license from Digital or the third-party owner of the software copyright.

No responsibility is assumed for the use or reliability of software on equipment that is not supplied by Digital Equipment Corporation.

Copyright © Digital Equipment Corporation 1991, 1992

All Rights Reserved.
Printed in U.S.A.

FCC NOTICE: The equipment described in this manual generates, uses, and may emit radio frequency energy. The equipment has been type tested and found to comply with the limits for a Class A computing device pursuant to Subpart J of Part 15 of FCC Rules, which are designed to provide reasonable protection against such radio frequency interference when operated in a commercial environment. Operation of this equipment in a residential area may cause interference, in which case the user at his own expense may be required to take measures to correct the interference.

The following are trademarks of Digital Equipment Corporation: DEC, DSA, DSDF, HSC, HSC50, HSC70, KDA, KDA50, KDB50, KDM, MicroVAX, PDP-11, RA, SA, SDI, UDA, UNIBUS, VAXsimPLUS, and the DIGITAL logo.

Contents

Introduction and Related Documentation 1

RA7x Characteristics 2

Thermal Stabilization Specifications . . 3

Setting Capacity Indicator Switch . . . 4

Troubleshooting 6

RA7x Parts 10

SA7x Parts 13

RA7x Electronics Block Diagrams . . . 15

RA71-RA73 Support 16

RA7x Drive Status Information 19

OCP Error Codes 30

Drive Error Codes and Fault Numbers 34

Figures

1	RA71/RA72 Capacity Indicator Switch	5
2	Drive Internal Error Log	7
3	Troubleshooting Flowchart	9
4	RA70 Exploded View	11
5	RA71-RA73 Exploded View	12
6	SA7x Enclosure Exploded View	14
7	RA70 Electronics—Simplified Block Diagram	15
8	RA71-RA73 Electronics—Simplified Block Diagram	15
9	RA7x Drive Status	20
10	RA7x Response Opcode (Byte 1) . . .	21
11	RA7x Lower Unit (Byte 2) and High Unit and Subunit Mask (Byte 3)	21
12	RA7x Request Byte (Byte 4)	22
13	RA7x Mode Byte (Byte 5)	23
14	RA7x Error Byte (Byte 6)	24
15	RA7x Controller Byte (Byte 7) and Retry Count (Byte 8)	25
16	RA7x Previous Command Opcode (Byte 9)	26
17	RA7x Drive State Byte (Byte 10)	27
18	RA7x Current Cylinder Address (Bytes 11 and 12)	27
19	RA7x Current Group (Byte 13)	28
20	RA7x Drive Error Code (Byte 14)	28
21	RA70 OCP Code Byte; RA71-RA73 Fault Number Byte (Byte 15)	28
22	SA7x OCP	29

Tables

1 Related Documentation 1
2 RA7x Characteristics 2
3 Thermal Stabilization Times 3
4 RA7x Part Numbers 10
5 SA7x Part Numbers 13
6 VAX Diagnostics for RA71-RA73 16
7 Operating Systems for RA71-RA73 . . 17
8 SDI Controllers for RA71-RA73 18
9 Retired VAX Supervisor Programs . . . 18
10 OCP Error Codes 30

Introduction and Related Documentation

This guide contains quick-reference information for RA7x disk drives (RA70, RA71, RA72, and RA73) and SA7x enclosures.

For more complete information about RA7x disk drives and SA7x enclosures, see the related documentation listed in Table 1.

Table 1 Related Documentation

Document Title	Order number
RA70 Disk Drive Technical Description Manual	EK–ORA70–TD
DSA Troubleshooting Flowchart	EK–DSATF–TM
BA27 Field Maintenance Print Set	MP–01429
SA7x Support Print Set	EM–01435
SA7x Field Maintenance Print Set	MP–01435
SAxxx Storage Array Configuration Guide	EK–SAXXX-CG
SA7x Enclosure User Guide	EK–OSA7X–UG
SA7x Enclosure Service Manual	EK–OSA7X-SM
RA7x Disk Drive Service Manual	EK–ORA7X-SM
RA70 Field Maintenance Print Set	MP–01428
RA71/RA72 Support Print Set	EM–01434
RA71/RA72 Field Maintenance Print Set	MP–01434
RA73 Field Maintenance Print Set	MP–01439
RA73 Support Print Set	EM–01439

RA7x Characteristics

Table 2 lists the characteristics of RA70 and RA71-RA73 disk drives.

Table 2 RA7x Characteristics

Characteristics	RA70	RA71	RA72	RA73
Total Number of Heads				
	12	15	21	22
Number of Data Heads				
	11	14	20	21
Number of Dedicated Servo Heads				
	1	1	1	1
Surfaces Containing Data and Embedded Servo Information				
	11	14	20	21
Formatted Data Storage Capacity				
	280 MB	700 MB	1.0 GB	2.0 GB

Although RA70 and RA71-RA73 disk drives are very similar in appearance, they differ structurally and electronically. The RA70 shoe plate is not interchangeable with those for the RA71-RA73 disk drives. None of the RA7x HDAs or ECMs are interchangeable.

Thermal Stabilization Specifications

When condensation is visible on the enclosure or the disk drive, stabilize the unit in the operating environment for six hours, or until the condensation is no longer visible.

When condensation is not visible on the enclosure or disk drive or enclosure, see Table 3 for correct thermal stabilization times.

Table 3 Thermal Stabilization Times

Temperature Range Degrees C	Temperature Range Degrees F	Minimum Stabilization Time
60 to 66	140 to 151	3 hours
50 to 59	122 to 139	2 hours
40 to 49	104 to 121	1 hour
30 to 39	86 to 103	30 minutes
18 to 29	**65 to 85**	**No stabilization required**
10 to 17	50 to 64	30 minutes
0 to 9	32 to 49	1 hour
–10 to –1	14 to 31	2 hours
–20 to –11	–4 to 13	3 hours
–30 to –21	–22 to –5	4 hours
–40 to –31	–40 to –21	5 hours

Setting Capacity Indicator Switch

Set the Capacity Indicator switch on the RA71 and RA72 disk drives, shown in Figure 1, as follows:

NOTE

The capacity indicator switch has *no function* on an RA73.

- **RA71 (700 MB)**
  Capacity Indicator switch should be up (on).
- **RA72 (1 GB)**
  Capacity Indicator switch should be down (off).

Figure 1 RA71/RA72 Capacity Indicator Switch

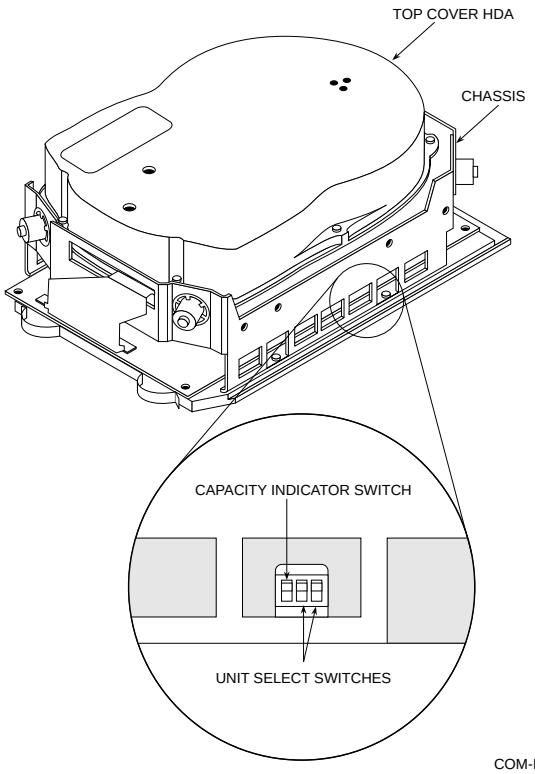

Troubleshooting

This section includes troubleshooting tips, an example of a drive internal error log (Figure 2), and a troubleshooting flowchart (Figure 3).

Tips for DSA Troubleshooting

Observe the following tips when troubleshooting DSA products:

- Avoid formatting new HDA units.
- Note that EDC errors are not drive problems.
- Note that forced errors are not necessarily HDA problems.
- Avoid running standalone diagnostics unless drive or system error logs are unavailable and all other troubleshooting techniques have failed.
- Ensure that equipment is thermally stabilized before attempting to power up.
- Use proper ESD grounding methods. Equipment is highly susceptible to static damage.
- Adhere to the service delivery strategy as outlined in specific component service manuals.

Figure 2 Drive Internal Error Log

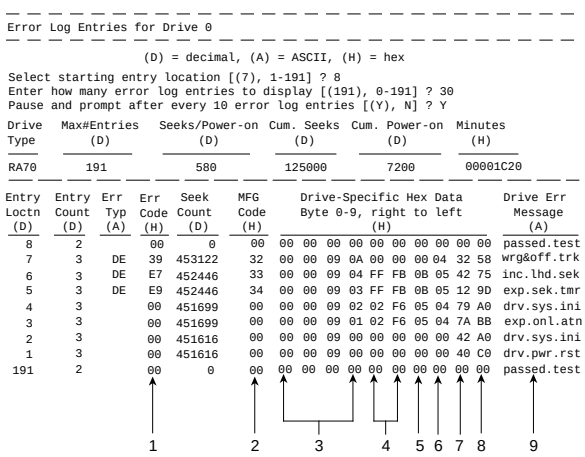

```
Error Log Entries for Drive 0

                    (D) = decimal, (A) = ASCII, (H) = hex

Select starting entry location [(7), 1-191] ? 8
Enter how many error log entries to display [(191), 0-191] ? 30
Pause and prompt after every 10 error log entries [(Y), N] ? Y

Drive   Max#Entries   Seeks/Power-on  Cum. Seeks  Cum. Power-on  Minutes
Type       (D)            (D)           (D)          (D)          (H)

RA70       191            580          125000        7200        00001C20

Entry  Entry  Err   Err   Seek    MFG      Drive-Specific Hex Data      Drive Err
Loctn  Count  Typ   Code  Count   Code     Byte 0-9, right to left       Message
 (D)    (D)   (A)   (H)   (D)     (H)                (H)                  (A)
  8      2          00      0      00  00 00 00 00 00 00 00 00 00 00  passed.test
  7      3    DE    39  453122     32  00 00 09 0A 00 00 00 04 32 58  wrg&off.trk
  6      3    DE    E7  452446     33  00 00 09 04 FF FB 0B 05 42 75  inc.lhd.sek
  5      3    DE    E9  452446     34  00 00 09 03 FF FB 0B 05 12 9D  exp.sek.tmr
  4      3          00  451699     00  00 00 09 02 02 F6 05 04 79 A0  drv.sys.ini
  3      3          00  451699     00  00 00 09 01 02 F6 05 04 7A BB  exp.onl.atn
  2      3          00  451616     00  00 00 09 00 00 00 00 00 42 A0  drv.sys.ini
  1      3          00  451616     00  00 00 09 00 00 00 00 00 40 C0  drv.pwr.rst
191      2          00      0      00  00 00 00 00 00 00 00 00 00 00  passed.test
                     ↑              ↑  ↑        ↑  ↑  ↑  ↑  ↑  ↑  ↑      ↑
                     1              2  3        4  5  6  7  8  9
```

1. Drive error code—see “Drive error codes and fault numbers” in this guide for an explanation of these codes
2. Manufacturing code (OCP code)—see the OCP error codes table in this guide for an explanation of these codes
3. Logic Processor Number of Minutes (bytes 9, 8, 7, and 6)
4. Servo Processor Destination Cylinder (bytes 5 and 4)
5. Servo Processor Destination Logical Head Number (byte 3)
6. Servo Processor Physical State Number (byte 2)—see the following page for a list of physical state numbers
7. Logic Processor Logical State Bit Flags (byte 1)—see the following page for a list of logical state bit numbers
8. Logic Processor Fault Number (byte 0)
9. Drive error message—see "Drive error codes and fault numbers" in this guide for a translation of these error messages

COM-0211

Servo Processor Physical State Numbers (Byte 2)

00–reset
01–retract (unload heads)
02–spin-up motor
03–spin-down motor
04–detent (track follow)
05–seek to cylinder
06–return to cylinder zero (load heads)
07–recalibrate
08–diagnostic

The following State Numbers apply only to the RA73:

09–fault
0A–PLL lock

Logic Processor Logical State Bit Flags (Byte 1)

Bit 07–hard error
Bit 06–soft fault
Bit 05–internal read/write ready
Bit 04–drive timing enabled
Bit 03–logical attention
Bit 02–logical topology state
Bit 01–logical available state
Bit 00–logical available state

NOTE

For more information about the physical state numbers and logical state bit flags, see the *RA7x Disk Drive Service Manual*.

Figure 3 Troubleshooting Flowchart

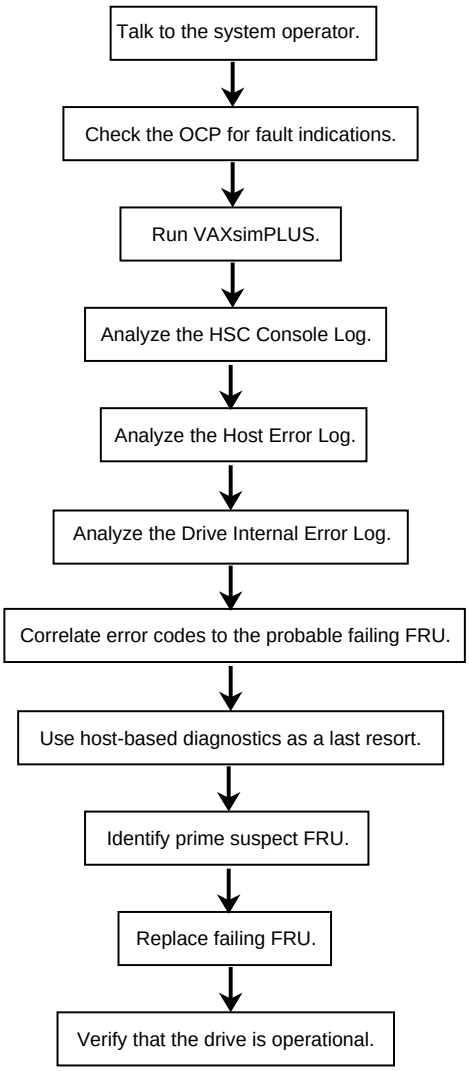

COM-R080

RA7x Parts

Table 4 lists RA7x part numbers. Figures 4 and 5 shows exploded views for RA70 and RA71-RA73 disk drives.

Table 4 RA7x Part Numbers

Part	Part Number
RA70 Disk Drive	
ECM	70-22494-01
HDA	70-21946-01
Shoe plate	70-22474-01
RA71 Disk Drive	
ECM	54-20826-01
HDA	70-28492-01
Shoe plate	70-29408-01
RA72 Disk Drive	
ECM	54-20826-01
HDA	70-28492-02
Shoe plate	70-29408-01
RA73 Disk Drive	
ECM	54-21396-01
HDA	70-28699-01
Shoe plate	70-29408-01
RA7x Disk Drive	
Electronically conductive field service grounding kit	29-11762

Figure 4 RA70 Exploded View

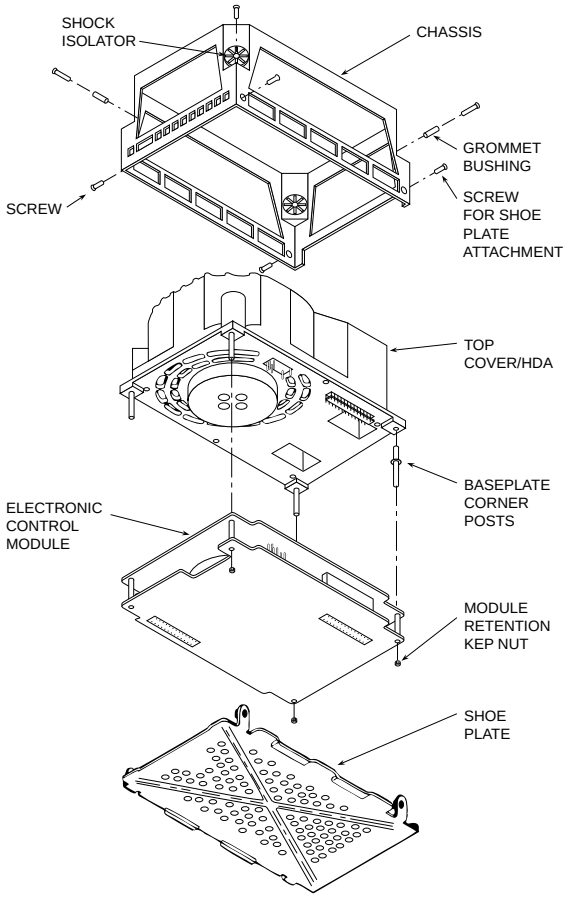

Figure 5 RA71-RA73 Exploded View

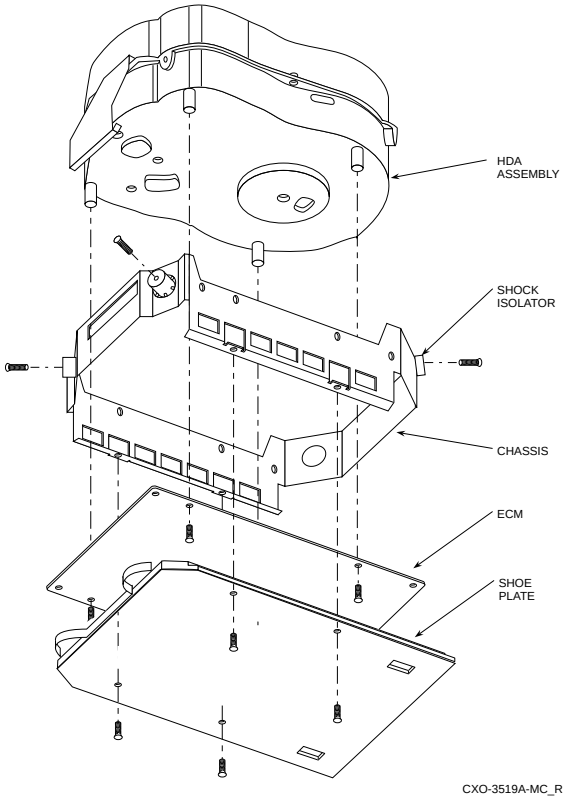

SA7x Parts

Table 5 contains a list of part numbers. Figure 6 shows an exploded view of an SA7x enclosure.

Table 5 SA7x Part Numbers

Part	Part Number
Chassis (enclosure assembly)	70-23901-01
Drive position filler	70-23970-01
Fan assembly	70-24440-01
Frame assembly	70-23913-01
OCP	
assembly	70-25696-01
cable, long 80 cm (31.5 in)	70-26254-02
cable, short 35.6 cm (14 in)	70-26254-01
Power cord	17-00442-19
Power harness	70-26255-01
Power supply	H7869-AK
Pushbutton switch	
with green LED	12-12717-13
Pushbutton switch cap	
left front	12-14027-14
left rear	12-14027-15
right front	12-14027-13
right rear	12-14027-12
SDI Cables	
External cable assembly	70-26257-01
Internal cable assembly	70-26256-01
Internal SDI cable harness	17-01699-01
Transition board	
Board 1	54-19171-01
Board 2	54-19015-01
Transition interface cables	17-02147-01

Figure 6 SA7x Enclosure Exploded View

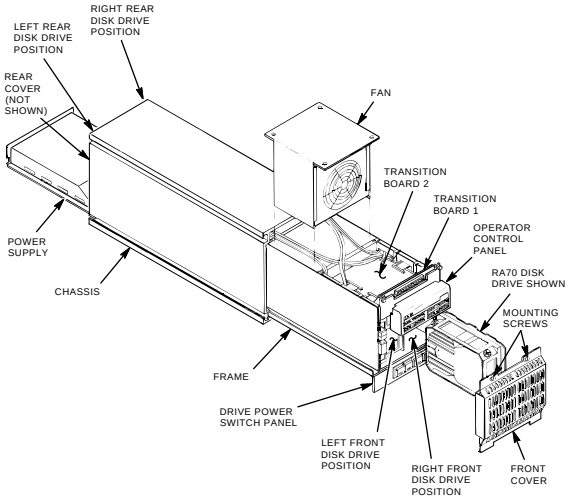

RA7x Electronics Block Diagrams

Figures 7 and 8 are electronics block diagrams for RA70 and RA71-RA73 disk drives.

Figure 7 RA70 Electronics—Simplified Block Diagram

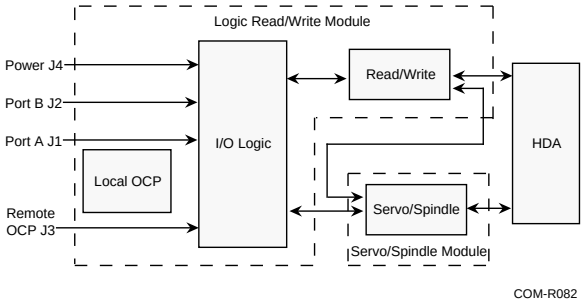

Figure 8 RA71-RA73 Electronics—Simplified Block Diagram

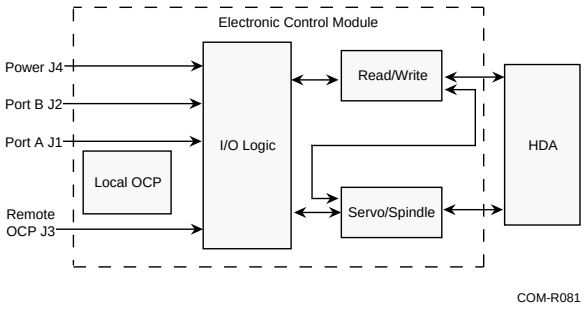

RA71-RA73 Support

Tables 6, 7, and 8 list the *minimum* versions of operating systems, diagnostics, and SDI controllers that support RA71-RA73 disk drives in Release 43.

The diagnostics and VAX supervisor programs in Table 6 all recognize RA71-RA73 disk drives. The retired VAX Supervisor programs in Table 9 do not recognize RA71-RA73 disks drives. However, they will properly test and operate the RA71-RA73 disk drives with the above disk drive diagnostics when the disk drives are "attached as RA70 disk drives" during program setup.

Table 6 VAX Diagnostics for RA71-RA73

Diagnostic Supervisor	Description	Version
EVRAE	Generic MSCP Exerciser	4.3
EVRLB	UDA/KDB50 Basic Disk Formatter	8.3
EVRLF	UDA/KDB50 Basic Subsystem Diagnostic	10.4
EVRLG	UDA/KDB50 Disk Drive Exerciser	10.3
EVRLJ	VAX UDA/KDB50/KDM70 Exerciser	4.3
EVRLK	VAX Bad Block Replace Utility	4.3
EVRLL	VAX Disk Resident Error Log Utility	3.3
EVRLM	KDM70 EEPROM Update Utility	1.6
EVRLN	DUP Control Program	1.6
EBSAA	Supervisor, 8200, 8250, 8300, 8550 (Bereta)	14.4-PAT1
ELSAA	Supervisor, 5800, 6000-2xx, 6000-3xx	14.4-PAT1
EMSAA	Supervisor, 6000-5xx	14.4-PT1
ERSAA	Supervisor, 6000-4xx	14.4-PAT1
EVSBA	VAX Diagnostic Autosizer	7.5
EVSBB	VAX Online Autosizer	4.0

Table 7 Operating Systems for RA71-RA73

Operating Systems Software	RA71/RA72 Minimum Version	RA73 Minimum Version
VMS	5.4-2[1]	5.5-2
VAXsimPLUS	1.6	2.0
ULTRIX-32	4.2	4.3
VAXELN	4.3	4.3-x
VAX System V	3.2.1	Not planned

[1]The Error Log Formatter (ERF) Version 5.4-2 must be upgraded to Version 5.4-2 (0001) to support RA71-RA72. Version 5.5-2 is required to support the RA73 disk drive.

Table 8 SDI Controllers for RA71-RA73

SDI Controller	Minimum Version
HSC40 (CRONIC)	V600
HSC50 (CRONIC)	V410
HSC60 (CRONIC)	V600
HSC70 (CRONIC)	V600
HSC90 (CRONIC)	V600 K.SI Interface SW Version 12 K.SDI Interface SW Version 39/40
KDM70	SW Version 30 (3.0) HW Version 17
KDA50	SW Version 8 HW Version 4
KDB50	SW Version 20 HW Version 28
UDA50A	SW Version 6 HW Version 0

Table 9 Retired VAX Supervisor Programs

Supervisor Program	Description
ECSAA	Supervisor, 750
EDSAA	Supervisor, 8600, 8650
EJSAA	Supervisor, 8820/30/40
ENSAA	Supervisor, 725, 730
ESSAA	Supervisor, 780, 785
EWSAA	Supervisor, 9000
EBSAA	Supervisor, 8530, 8550, 8700, 8800, 8820N

RA7x Drive Status Information

Figures 9 through 22 disk drive status information diagrams for the RA7x disk drives. These drives format the drive status bytes as shown in Figure 9. Note that Byte 15 contains different data for RA70 and RA71-RA73 disk drives. Byte 15 contains the OCP code for an RA70 disk drive; for RA71-RA73 drives, byte 15 contains the fault number.

NOTE

Unless specifically stated otherwise, the status information diagrams apply to the *same bytes* for all RA7x drives.

Figure 9 RA7x Drive Status

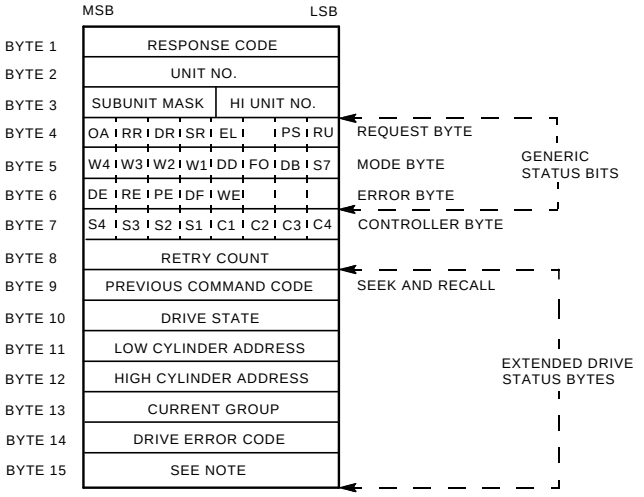

NOTE: IF DRIVE IS RA70, BYTE 15 CONTAINS OCP CODE. IF DRIVE IS RA71/RA72/RA73, BYTE 15 CONTAINS FAULT NUMBER.

CXO-3521A-TI_R

Figure 10 RA7x Response Opcode (Byte 1)

COM-R055

Figure 11 RA7x Lower Unit (Byte 2) and High Unit and Subunit Mask (Byte 3)

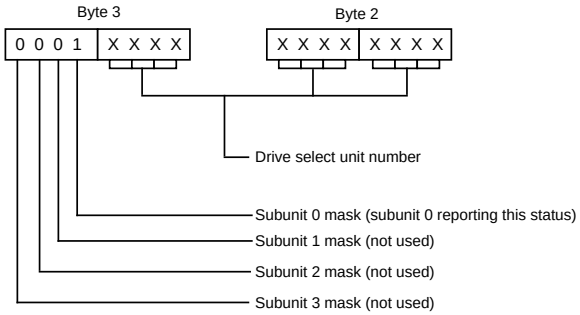

COM-R056

Figure 12 RA7x Request Byte (Byte 4)

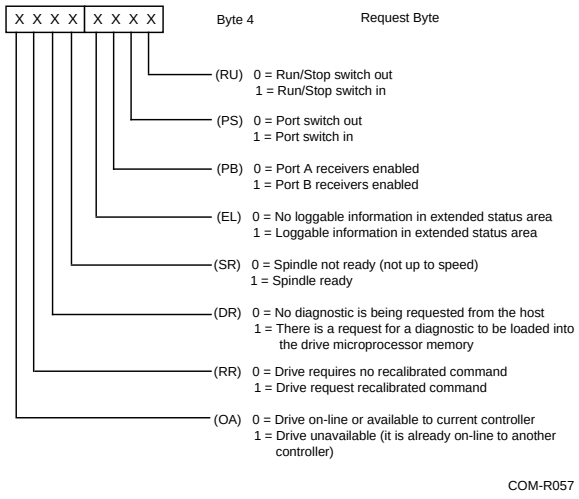

Figure 13 RA7x Mode Byte (Byte 5)

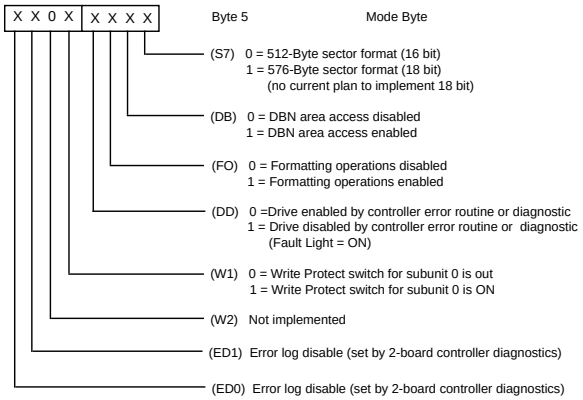

Figure 14 RA7x Error Byte (Byte 6)

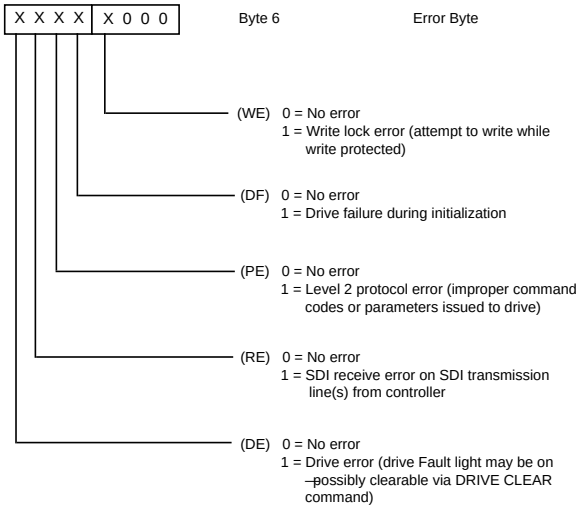

Figure 15 RA7x Controller Byte (Byte 7) and Retry Count (Byte 8)

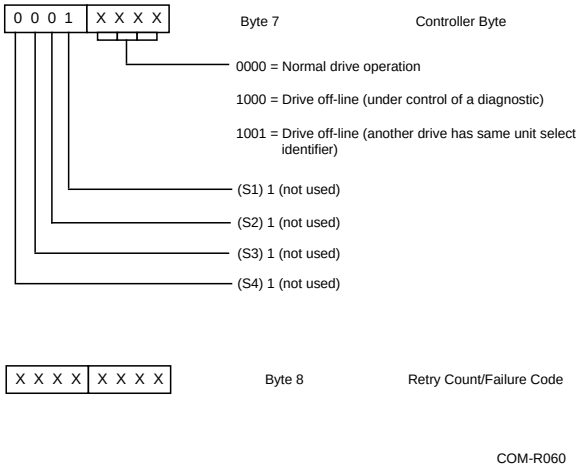

COM-R060

Figure 16 RA7x Previous Command Opcode (Byte 9)

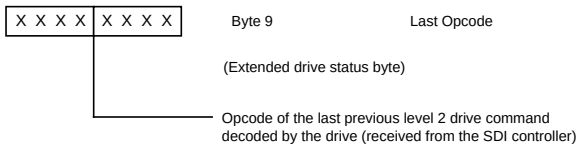

Last Level 2 Drive Commands

The following is a list of the last level 2 drive commands decoded by the drive (received from the SDI controller).

81—change mode
82—change controller flags
03—diagnose
84—disconnect (drive)
05—drive clear
06—error recovery
87—get common characteristics
88—get subunit characteristics
0A—initiate seek
8B—on line
0C—run
8D—read memory
8E—recalibrate
90—topology
0F—write memory
FF—select group (level 1 command, processed by firmware seek head select subroutines)

Figure 17 RA7x Drive State Byte (Byte 10)

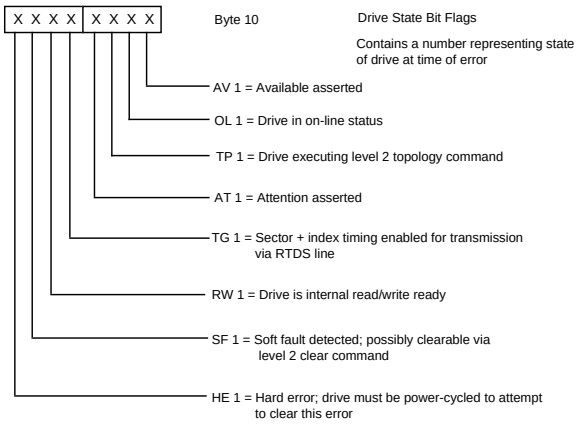

Figure 18 RA7x Current Cylinder Address (Bytes 11 and 12)

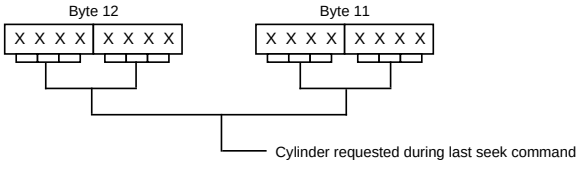

Figure 19 RA7x Current Group (Byte 13)

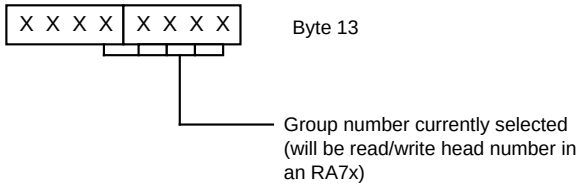

Figure 20 RA7x Drive Error Code (Byte 14)

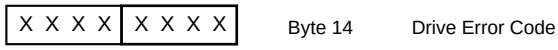

Figure 21 RA70 OCP Code Byte; RA71-RA73 Fault Number Byte (Byte 15)

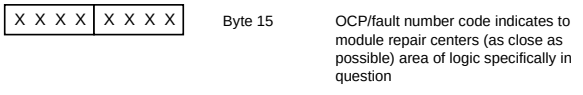

Figure 22 SA7x OCP

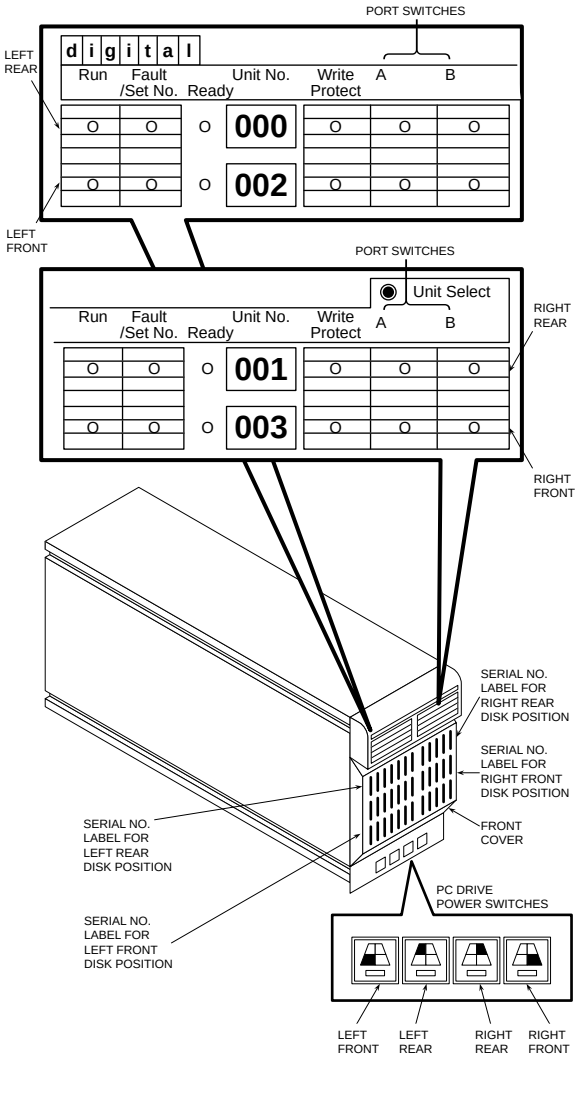

OCP Error Codes

Table 10 lists the error codes displayed by the OCP lights. The next section, "Drive Error Codes and Fault Numbers," describes each error code and the most probable cause of the error.

Table 10 OCP Error Codes

Description and FRUs	Run	Stop	Fault	Ready	Write Protect	Port A	Port B
00–No error							
	–	–	–	–	–	–	
01–Logic input/output module							
Note[1]	–	–	–	–	–	On	
02–SDI PSID interface							
ECM	–	–	–	–	On	–	
SDI con-troller	–	–	–	–	On	–	
SDI cable	–	–	–	–	On	–	
03–SDI gate array							
ECM	–	–	–	–	On	On	
04–MC 6803 microcomputer							
ECM	–	–	–	On	–	–	
05–27264 UVPROM							
ECM	–	–	–	On	–	On	
06–2716 static RAM							
ECM	–	–	–	On	On	–	
07–X2816A EEPROM							
ECM	–	–	–	On	On	On	
08–Bus decoders and drivers							
Note[1]	–	–	On	–	–	–	
09–ZXENDEC							
ECM	–	–	On	–	–	On	

[1]Obtain the drive error code from the host error log, the internal drive error log, or the HSC console. Refer to the next section "Drive Error Codes and Fault Numbers."

Table 10 (Continued) OCP Error Codes

Description and FRUs	Run Stop	Fault	Ready	Write Protect	Port A	Port B
SDI controller	–	–	On	–	–	On
0A–Analog signal processor						
ECM	–	–	On	–	On	–
HDA	–	–	On	–	On	–
0B–Detector qualifier						
Note[1]	–	–	On	–	On	On
11–Servo module digital circuits						
ECM	–	On	–	–	–	On
HDA	–	On	–	–	–	On
12–Servo gate array						
ECM	–	On	–	–	On	–
13–TMS 32020 processor						
ECM	–	On	–	–	On	On
14–Static RAM						
ECM	–	On	–	On	–	–
15–Servo analog						
ECM	–	On	–	On	–	On
HDA	–	On	–	On	–	On
16–Voltage controlled oscillator (VCOO)						
ECM	–	On	–	On	On	–
HDA	–	On	–	On	On	–
17–Spindle motor control chip						
ECM	–	On	–	On	On	On
HDA	–	On	–	On	On	On
18–Spindle power amp						
ECM	–	On	On	–	–	–
HDA	–	On	On	–	–	–
19–Actuator power amp						

[1]Obtain the drive error code from the host error log, the internal drive error log, or the HSC console. Refer to the next section "Drive Error Codes and Fault Numbers."

Table 10 (Continued) OCP Error Codes

Description and FRUs	Run	Stop	Fault	Ready	Write Protect	Port A	Port B
ECM	–	On	On	–	–	On	
HDA	–	On	On	–	–	On	
1A–Actuator analog							
ECM	–	On	On	–	On	–	
HDA	–	On	On	–	On	–	
1B–A-D and D-A converters							
ECM	–	On	On	–	On	On	
HDA	–	On	On	–	On	On	
1C–Analog MUXs							
ECM	–	On	On	On	–	–	
HDA	–	On	On	On	–	–	
1E–HDA Capacity Indicator switch setting							
ECM	–	On	On	On	On	–	
HDA	–	On	On	On	On	–	
Note[2]	–	On	On	On	On	–	
1F–Head/disk assembly							
HDA	–	On	On	On	On	On	
ECM	–	On	On	On	On	On	
30–Microprocessor module							
ECM	On	On	–	–	–	–	
31–OCP module							
ECM	On	On	–	–	–	On	
Note[1]	On	On	–	–	–	On	
32–Fault module							
Note[1]	On	On	–	–	On	–	
33–Spindle motor control module							
Note[1]	On	On	–	–	On	On	

[1]Obtain the drive error code from the host error log, the internal drive error log, or the HSC console. Refer to the next section "Drive Error Codes and Fault Numbers."
[2]Verify that the HDA Capacity Switch setting is as described in "Setting the Capacitor Indicator Switch" section.

Table 10 (Continued) OCP Error Codes

Description and FRUs	Run Stop	Fault	Ready	Write Protect	Port A	Port B
34–Digital signal processor module						
ECM	On	On	–	On	–	–
HDA	On	On	–	On	–	–
35–SDI module						
ECM	On	On	–	On	–	On
SDI cable	On	On	–	On	–	On
SDI con-troller	On	On	–	On	–	On
36–Microprocessor unit module						
Note[1]	On	On	–	On	On	–
37–Diagnostic module						
ECM	On	On	–	On	On	On
HDA	On	On	–	On	On	On
3E–Debug error trap						
Note[1]	On	On	On	On	On	–
3F–Power supply						
ECM	On	On	On	On	On	On
Power supply	On	On	On	On	On	On
Note[1]	On	On	On	On	On	On

[1]Obtain the drive error code from the host error log, the internal drive error log, or the HSC console. Refer to the next section "Drive Error Codes and Fault Numbers."

Drive Error Codes and Fault Numbers

00—Internal Error Log Events

Error Description: The following fault numbers (FNs) may appear in the drive internal error log with a drive error code of "00" (not a drive error):

FN: 00—passed.test.—no drive detected fault
FN: 20—drv.sys.rst.—valid drive system reset
FN: 3E—rdg.off.trk.—read gate and off track
The drive will not post a recoverable read-and-off-track error to prevent interruption to the controller. This allows the controller to execute all of its available retry/error recovery sequences to the drive and if necessary, retrieve user data during a recoverable error.
FN: A0—drv.sys.ini.—valid drive system initialize.
The drive received an INIT pulse from the controller via the SDI RTCS line.
FN: BB—exp.onl.atn.—expired on-line timer with attention.
While in the on-line state, the drive timed out the controller and raised attention. A second timeout occurred and the drive performed a disconnect to the SDI and went to the available state. This is usually the result of a host failure, a controller failure, or SDI cable disconnection.
FN: BC—inv.sys.ini.—invalid or spurious SDI INIT.
The drive received a SDI initialize pulse (via RTCS line) and discontinued the drive clock (per SDI specification), but the controller did not clear SDI INIT after the drive responded with discontinued clocks.
FN: C0—drv.pwr.rst.—drive power reset
FN: 28—int.brt.ers.—initiate burst write erase
FN: 29—ini.brt.wrt.—initiate burst write
FN: 2A—passed.brwt.—burst write complete
Most Probable Cause: Refer to specific Fault Number (FN) above.

03—Spin-Up Timeout

Error Description: The I/O processor has instructed the spindle subsystem to spin up, but the spindle subsystem has not indicated up to speed within 15 seconds.

FN: 70—exp.sup.tmr.—expired spinup timer

FN: 72—exp.pur.tmr.—expired purge cycle timer)
Most Probable Cause: ECM, HDA

04—Spin-Up Actuator Fault

Error Description: Prior to a spinup operation, the drive firmware performs some actuator tests. A failure during this test will result in this error and the drive will abort any further attempts to spin up the disks.

FN: 6F—sup.svo.dgn.—spinup servo diagnostic fault)
Most Probable Cause: HDA, ECM

05—Power Supply

Error Description: The drive has detected changes in PWR OK resulting from the detection of ACOK or changes detected by the on board +12v and +5v dc sensor circuits. This may cause all of the operator control panel (OCP) indicators to stay on.

FN: 3F—inv.drv.pwr.—invalid or spurious drive power
Most Probable Cause: SA7x Power Supply, Internal SA7x cables, ECM, site power problems

06—Microcode Fault

Error Description: The I/O processor tried to access an unused ROM location due to a hardware problem or a software error internal to the drive.

FN: Not Appropriate
Most Probable Cause: ECM

07—Frame Sequence Error

Error Description: There are three transmission error types that are reported as sequence errors:

- A message continuation frame or message end frame was decoded before a message start frame.
- Two message start frames were decoded in a row.
- Less than two frames, a message start frame and a message end frame, or more than 63 frames have been decoded before a message end frame.

FN: A1—grp.frm.seq.—group select frame sequence error
FN: AB—str.frm.seq.—start frame sequence error
FN: AC—con.frm.seq.—continue frame sequence error
FN: AD—end.frm.seq.—end frame sequence error
Most Probable Cause: ECM, SDI controller, SDI cable

08—Level 2 Message Checksum Error

Error Description: The last level 1 frame transmitted as a result of a level 2 command is the message end frame. The lower eight bits of the end frame contain a checksum for the entire level 2 message. This error occurs if the checksum calculated by the drive does not match the checksum transmitted as part of the message end frame.

FN: A5—inc.cmd.cksm—incorrect command packet checksum
Most Probable Cause: ECM, SDI controller, SDI cable

09—SDI Message Framing Error

Error Description: The upper eight bits of the control frame did not match one of the nine possible framing codes as defined in the SDI specification.

FN: A4—inv.frm.code.—invalid frame code
Most Probable Cause: ECM, SDI controller, SDI cable

0A—SDI Command Opcode Parity Error

Error Description: The opcode in a level 2 SDI command was received with incorrect parity. The opcode byte must be even parity.

FN: B3—inc.opc.prty—incorrect command opcode parity
Most Probable Cause: ECM, SDI controller, SDI cable

0B—Invalid Opcodes

Error Description: One of two conditions have been detected:

- The opcode received in the level 2 command was not one of the 16 possible opcodes.
- The opcode received in the level 2 command was one of the 16 possible opcodes, but the opcode parity was wrong.

FN: B2—inv.cmd.opcd.—invalid command packet opcode
FN: B7—inv.lv1.opcd.—invalid level 1 command opcode
Most Probable Cause: ECM, SDI controller, SDI cable

0C—Command Length Error

Error Description: The byte count for any given level 2 command is incorrect.

FN: A3—inv.cmd.byct.—invalid command packet byte count
FN: B1—inv.cmd.byct.—invalid command packet byte count
FN: B6—inc.lv1.byct.—invalid level 1 command packet byte count
Most Probable Cause: ECM, SDI controller, SDI cable

0E—Real-Time Command Contains Invalid Head Address

Error Description: A real-time command is one of the SDI level 1 data transfer commands. If the low byte of any of these commands indicates an invalid head, this error occurs.

FN: A2—inv.grp.num.—invalid group select (head) number
Most Probable Cause: ECM, SDI controller, SDI cable

13—Spindle Fault

Error Description: The motor control circuit has detected a condition that could prevent the spindle from spinning at a safe speed.

FN: 63—ast.smc.flt.—asserted spindle motor control fault
Most Probable Cause: ECM, HDA

14—Spindle Over Current

Error Description: The current being used by the spindle motor is too high.

FN: 61—ast.smc.pwr.—asserted spindle motor control power
FN: 62—neg.smc.pwr.—negated spindle motor control power
Most Probable Cause: ECM, HDA, SA7x power supply

16—Guard Band Error

Error Description: During normal operation, the heads have moved into the inner or the outer guard band area. If the servo system is in the process of loading or unloading heads (for example: the positioner is moving from the landing zone or to the landing zone), the I/O processor will mask out the guard band signals internal to the GASP gate array and thus prevent a servo fault from occurring.

FN: 46—out.grd.bnd.—outer guard band fault
FN: 47—inn.grd.bnd.—inner guard band fault
Most Probable Cause: ECM, HDA

17—Invalid or Inconsistent Parameters

Error Description: One or more of the parameters sent by the controller as part of the level 2 command is invalid or inconsistent.

FN: 18—inv.gbd.cyl.—invalid guard band cylinder access
FN: AE—inc.sct.fmt.—incorrect drive sector format
FN: B8—inv.lv1.grp.—invalid level 1 group select (head) number
FN: C2—inv.sct.fmt.—invalid drive sector format
FN: C3—inv.dmr.num.—invalid diagnose memory region number
FN: C4—inc.dmr.num.—incorrect diagnose memory region number
FN: C6—inv.top.disc.—invalid topology disconnect
FN: C7—err.flg.astd.—generic error bit flag asserted
FN: C9—inv.lv1.num.—invalid error recovery level number
FN: CB—inv.grp.num.—invalid group select (head) number level 2
FN: CC—inv.cyl.adr.—invalid cylinder address number level 2
FN: CD—inv.dgn.cyl.—invalid diagnostic cylinder access
FN: D0—inv.rmr.num.—invalid read memory region number
FN: D1—inv.rmr.ofst.—invalid read memory region offset
FN: D3—inv.wmr.byct.—invalid write memory region byte count
FN: D4—inv.wmr.num.—invalid write memory region number
FN: D5—inv.wmr.ofst.—invalid write memory region offset
FN: D6—inv.wmr.siz.—invalid write memory region size
Most Probable Cause: ECM, SDI controller, SDI cable

18—Opcode/Parameter Invalid/Inconsistent with Drive State

Error Description: The level 2 command received from the controller is valid, but the command itself or a parameter contained in the command is inconsistent with the drive's current state or physical status.

FN: 68—asup.bkd.ctrl.—spinup blocked by the controller
FN: 69—sup.bkd.dgn.—spinup blocked by diagnostic
FN: B4—inc.cmd.flt.—incorrect command drive fault state
FN: B5—inc.cmd.lsn.—incorrect command drive logical state number
FN: B9—inv.svo.hsw.—invalid level 1 servo head switch
FN: C1—drv.wrt.prtd.—drive write protected
FN: C5—inc.drst.top.—incorrect drive state—NOT topology
FN: C8—flt.not.negd.—fault or error not cleared
FN: CA—inv.svo.rcv.—invalid servo error recovery
FN: CE—inv.svo.sek.—invalid servo seek
FN: CF—run.sw.stop.—run switch in 'STOP' position
FN: D2—inv.run.lsn.—invalid run logical state number
Most Probable Cause: ECM, SDI controller, SDI cable

1D—Actuator Over Speed Error

Error Description: During course positioning mode the positioner velocity was greater than design specifications.

FN: 4B—act.ovr.spd.—actuator over speed
Most Probable Cause: ECM, HDA

1E—Actuator Over Current Error

Error Description: The current being used by the read/write head actuator is too high.

FN: 4C—act.ovr.cur.—actuator over current
Most Probable Cause: ECM, HDA

1F—Sector Overrun Error

Error Description: The internal read gate or write gate was asserted and a sector pulse or an index pulse occurred.

FN: 51—sct.ovr.run.—sector over run
Most Probable Cause: ECM, SDI controller, SDI cable, HDA

25—Off Track Error

Error Description: During track following mode, the DSP processor determined that the read/write heads are not within track center line tolerances.

FN: 4D—svo.off.trk.—servo off track error
Most Probable Cause: HDA, ECM

26—Spindle Speed Error

Error Description: The spindle speed is not operating within design specifications. The nominal spindle speed is 4000 r/min for the RA70 and 3600 r/min for the RA71/RA73 disk drives.

FN: 6E—inc.sup.svo.—incorrect spinup servo state number
FN: 71—inc.sup.psn.—incorrect spinup physical state number
FN: 73—inc.pur.psn.—incorrect purge cycle physical state number
FN: 77—inc.run.psn.—incorrect run physical state number
Most Probable Cause: ECM, HDA

27—HDA Over Temperature

Error Description: The temperature inside the HDA has exceeded the maximum allowed for safe operation.

FN: 4F—hda.ovr.tmp.—head disk assembly over temperature
Most Probable Cause: SA7x fan, HDA, ECM.
Be sure the disk is operating within the environmental specifications.

28—Module Over Temperature Error

Error Description: Sensing circuits on the ECM have detected temperatures that exceed the maximum allowed for safe and reliable operation.

FN: 4E—snk.ovr.tmp.—heat sink assembly over temperature
FN: 3C—xep.ovr.tmp.—module exception over temperature error
FN: 3D—com.ovr.tmp.—module common over temperature error
Most Probable Cause: SA7x fan, ECM, HDA. Be sure that the disk is operating within the environmental specifications.

31—Read Gate and Write Gate Error

Error Description: The SDI gate array detected both internal read gate and write gate at the same time.

FN: 5A—rdg&wrs.ast.—read state and write state both asserted
Most Probable Cause: ECM, SDI controller, SDI cable

32—Read/Write While Faulted

Error Description: Even though the drive is in a faulted condition, the drive detected either RTCS read gate or RTCS write gate.

FN: 52—flt&rdg.wrg.—fault and read gate or write gate both asserted
Most Probable Cause: ECM, SDI controller, SDI cable

33—Attempt to Write Through Bursts

Error Description: The read/write heads were over the embedded burst area of the sector, and the internal write gate was asserted.

FN: 53—wrg&brt.prt.—write gate and burst protection both asserted
Most Probable Cause: SDI controller, ECM, SDI cable

NOTE

See Table 9 and verify the minimum controller revision.

34—Data Encoder/Decoder Error

Error Description: A failure of the data encoder/decoder custom chip or some of its associated circuitry.

FN: 5C—enc.pls.flt.—encoder pulse fault (RWENDEC)
Most Probable Cause: ECM

35—Write Unsafe

Error Description: A condition exists with the write data path (for example: read/write heads, preamp chips, flex circuit, etc.) which would prevent the drive from correctly writing data to the disk surface.

FN: 5B—wrg&wrt.uns.—write gate and write unsafe both asserted
Most Probable Cause: ECM, HDA

39—Write and Off Track

Error Description: While write gate was asserted, the read/write heads moved off track.

FN: 58—wrg&off.trk.—write gate and off track both asserted
Most Probable Cause: ECM, HDA

3A—Write and Write Protected

Error Description: The drive was write protected and detected the assertion of the internal write gate.

FN: 59—wrg&wrt.prt.—write gate and write protection both asserted
Most Probable Cause: ECM, SDI controller, SDI cable

3B—AGC Fault

Error Description: Either the automatic gain control (AGC) circuit has failed or read signal amplitude variations have far exceeded the capability of the AGC circuit to maintain a proper signal lock. The latter of these may be caused by a severe signal degradation ratio (SDR, erasure) from a defective HDA.

FN: 5D—agc.lck.flt.—automatic gain control lock fault
Most Probable Cause: ECM, HDA

3C—Servo Faults

Error Description: There are hardware-detected inconsistencies with the servo system. These are divided into two categories: actuator faults and servo faults.

FN: 57—hrd.svo.flt.—hard servo fault
Most Probable Cause: ECM, HDA

41—SDI Command/Response Timeout

Error Description: The drive detected the start of an incoming SDI command or the transmission of an SDI response, but the operation did not complete within a specified time period.

FN: A8—exp.rsp.tmr.—expired response packet timer
FN: A9—exp.cmd.tmr.—expired command packet timer
Most Probable Cause: ECM, SDI controller, SDI cable

43—TCR and R/W Ready Out L

Error Description: Transfer command received (TCR) and read/write ready out L indicates the drive received a data transfer command and read/write ready was not asserted.

FN: 50—tcr&r/w.rdy.—TCR and NOT read/write ready both asserted
Most Probable Cause: ECM, SDI controller, SDI cable

44—Format Command and Format Not Enabled

Error Description: An SDI level 1 select track and format on index or format on sector or index command was decoded by the SDI gate array, but the enable format bit was not set.

FN: 55—fmt.w/o.ena.—format command without format enabled error
Most Probable Cause: ECM, SDI controller, SDI cable

4B—Index Error

Error Description: Index was detected when it should not have been or was not detected when it should have been.

FN: 56—idx.pls.flt.—index pulse fault
Most Probable Cause: HDA, ECM

4C—External Hardware Fault

Error Description: The gate array or the ground connection on the ECM is broken.

FN: 5E—ext.hrd.flt.—external hardware fault
Most Probable Cause: ECM

4D—Write and Bad Embedded

Error Description: The drive internal write gate is asserted and embedded bursts are not valid.

FN: 54—wrg&emb.bad.—write gate and embedded NOT OK both asserted
Most Probable Cause: ECM, HDA

4F—SDI Transmit Error—Pulse Error

Error Description: Extra or missing pulses on the SDI write command line (data pulse error) or the RTCS line (control pulse error) were detected.

FN: 5F—tcr&pls.err.—TCR and pulse error both asserted (PSID)
Most Probable Cause: ECM, SDI controller, SDI cable

50—DSP Diagnostic Timeout

Error Description: There is not a specific error code for a failure during the initialization section of the DSP diagnostic. However, if the DSP fails to execute the basic initialization, it is most likely hung (or lost) and is not able to pass an error code to the I/O processor. It is possible that the initialization completed and the problem is with the analog loop test. Realize that the effect is the same: the I/O processor detects diagnostic timeout due to the fact the DSP does not respond with diagnostic complete or error detected.

FN: 84—exp.exc.tmr.—expired servo (DSP) execute timer
Most Probable Cause: ECM

51—Byte/Sector Counter Failure

Error Description: Reported any time the counter is checked and is incorrect.

FN: E5—inv.sct.ctr.—invalid sector counter
Most Probable Cause: ECM

60—Read/Write Head Select Failure

Error Description: One of two conditions occurred. While trying to select a specific head to read or write, the DSP detected a soft servo fault and as such could not complete the head switch operation, or the I/O processor timed out waiting for the DSP to complete the head switch operation. Realize that if the drive detects any other faults, these faults are reported with the real-time error code associated with the error.

FN: F2—inv.dgn.cnt.—invalid diagnostic (head) bit error count
FN: F3—inc.dgn.cnt.—incorrect diagnostic (track) bit error count
FN: F5—exp.dgn.sct.—expired diagnostic sector timer
FN: FA—exp.dgn.rws.—expired diagnostic read/write sector timer
FN: FE—inc.dgn.rdy.—incorrect diagnostic ready
Most Probable Cause: ECM, HDA

61—Drive Capacity Configuration Error

Error Description: One of two conditions occurred. Either the HDA capacity indicator switch on the RA71/RA72 disk drive was set incorrectly, or the ECM logic cannot determine whether the HDA is an RA71 disk drive (700 MB storage capacity) or an RA72 disk drive (1 GB storage capacity).

If the HDA capacity indicator switch was set incorrectly, the drive will spin down and you will be unable to spin it up again until you set the switch correctly. You will receive fault number 19. Verify the switch setting. If the HDA is an RA71, the switch should be in the on position (up). If the HDA is an RA72, the switch should be in the off position (down). See the section on setting RA71/RA72 capacity indicator switch and refer to Figure 1.

If the capacity indicator switch is set correctly and you obtain fault number 1A, this indicates that the head table, which defines whether the drive is an RA71 or an RA72, cannot be read from the HDA. The problem may be related to the ECM or HDA.

FN: 19—inc.hda.swi.—incorrect HDA capacity switch setting
FN: 1A—inv.hda.type—invalid HDA type (can't determine HDA type)
Most Probable Cause: ECM, HDA

62—Read Failure

Error Description: One of six possible conditions occurred during the diagnostic read section of the test. The six conditions are:

- Invalid sector number
- Expired sector timer
- Expired read sector timer
- Incorrect read sector
- Read diagnostic failure
- Incorrect sector error count

FN: F4—inv.dgn.sct.—invalid diagnostic read sector number
FN: F6—inv.dgn.rsf.—invalid diagnostic read sector fault
FN: F7—exp.dgn.rds.—expired diagnostic read sector timer
FN: F8—inc.dgn.rds.—incorrect diagnostic read sector number
Most Probable Cause: ECM, HDA

67—Write Failure

Error Description: One of five possible conditions occurred during the diagnostic write section of the test. The five conditions are:

- Invalid sector number
- Expired sector timer
- Expired write sector timer
- Incorrect write sector
- Write diagnostic failure

FN: F9—inv.dgn.wsn.—invalid diagnostic write sector number
FN: FB—inv.dgn.wsf.—invalid diagnostic write sector fault
FN: FC—exp.dgn.wrs.—expired diagnostic write sector timer
FN: FD—inc.dgn.wrs.—incorrect diagnostic write sector number
Most Probable Cause: ECM, HDA

85—External RAM Failure

Error Description: If, during any data verification process, the data stored in the processor external RAM location does not match the data that was written to that location, the test is terminated and this error is reported.

FN: E3—inv.dat.mem.—invalid external static RAM memory
Most Probable Cause: ECM

86—Internal RAM Failure

Error Description: If during any data verification process the data stored in the processor internal RAM location does not match the data that was written to that location, the test is terminated and this error is reported.

FN: E4—inv.ram.mem.—invalid internal static RAM memory
Most Probable Cause: ECM

87—UVPROM Checksum Failure

Error Description: This test calculates a checksum by adding, without carry, all the locations of the UVPROM. The sum is then compared to a stored value. If the computed sum and the stored sum do not match, this error will result.

FN: E2—inv.rom.sum.—invalid UVPROM checksum
Most Probable Cause: ECM

88—I/O Processor Sanity Failure

Error Description: This test verifies the I/O processor's ability to execute basic processor functions including branch instructions, verifying interrupts, and one of the general timers. Indications of this failure are:

- The basic processor functions fail.
- The interrupt/timer test fails.

FN: E0—ins.mcu.dgn.—insane microprocessor diagnostic
FN: E1—inv.ctr.int.—invalid counter over flow interrupt
Most Probable Cause: ECM

89—EEPROM Failure

Error Description: The I/O processor has detected a failure with the EEPROM memory used to store drive internal error log entries.

FN: 41—inv.log.fmt.—invalid EEPROM error log format
FN: 42—exp.pwc.tmr.—expired EEPROM page write cycle timer
FN: 43—inc.pwc.dat.—incorrect EEPROM write page cycle data
FN: 44—exp.bwc.tmr.—expired EEPROM byte write cycle timer
Most Probable Cause: ECM

8A—GASP Mailbox Failure

Error Description: The I/O processor address and data path lines to the GASP gate array are verified in both normal mode and register mode, and the hardware protocol (flags) and the data integrity of the mailboxes is verified in register mode.

FN: EC—inv.dsp.bus.—invalid DSP bus test
FN: ED—inv.dsp.mbx.—invalid DSP mailbox test
Most Probable Cause: ECM

8B—DSP External RAM Failure

Error Description: During the data verification process, the data stored in the DSP external RAM location does not match the data that was written to that location.

FN: EE—inv.dsp.mem.—invalid DSP memory test
Most Probable Cause: ECM

8C—Sector Pulse Failure

Error Description: A sector pulse error is reported if the signal sector pulse H should be asserted and it is not, or if the signal should not be asserted and it is.

FN: E6—inv.sct.pls.—invalid sector pulse
Most Probable Cause: ECM

8D—External Loop Back Failure

Error Description: External loop back failure occurs if the signal Init Req H should be asserted and it is not, or if it should not be asserted and it is.

FN: EA—ext.lop.tst.—invalid external loop back test
Most Probable Cause: ECM

94—Loop Back Frame Not Received

Error Description: Non-transfer command received (NTCR) did not become asserted after an SDI frame was sent.

FN: E7—int.lop.tst.—invalid internal SDI loop back test
Most Probable Cause: ECM

95—Loop Back Frame Code Incorrect

Error Description: The frame was received, but it is not the same frame as was sent.

FN: E8—inv.frm.cod.—invalid response frame code
Most Probable Cause: ECM

96—Loop Back Frame Data Incorrect

Error Description: The frame was received correctly and the frame code was correct, but the data that was received did not match the data that was sent.

FN: E9—inv.frm.byt.—invalid response frame byte
Most Probable Cause: ECM

9A—Read and Off Track

Error Description: The heads were not fine-positioned or locked on track (relative to the embedded servo information) at the time a read operation was ready to start. The drive took the necessary actions to establish the on-track condition.

The drive will not post a recoverable read-and-off-track error to prevent interruption to the controller. This allows the controller to execute all of its available retry/error recovery sequences to the drive and if necessary, retrieve user data during a recoverable error.

FN: 09—rdg&off.trk.—read gate and off track both asserted
Most Probable Cause: HDA, ECM

9B—Write and Off Track

Error Description: While write gate was asserted, the read/write heads moved off track.

FN: 58—wrg&off.trk.—write gate and off track both asserted
Most Probable Cause: ECM, HDA

A0 Illegal Diagnostic Sequence

Error Description: The controller issued an SDI DIAGNOSE command to the drive. The drive determined that the requested diagnostics tests were not in correct sequence or out of context with the current state of the drive (for instance, seek test while drive spun down). It also indicates that one of the diagnose error commands was executed without the error log being in the correct state. This could be an **operator error** if special controller diagnostics were manually invoked and the user inadvertently entered incorrect parameters.

FN: D9—ill.dgn.seq—illegal diagnostic sequence
Most Probable Cause: Operator error, ECM, SDI controller

C6—PLO Failure

Error Description: The VCO clock is not in sync or has fallen out of sync with the rotating disk.

FN: 48—plo.lck.flt.—PLO lock failure
Most Probable Cause: HDA, ECM

C9—Analog Loop Failure

Error Description: There are three possible conditions that result in analog loop failure:

- The I/O processor could not complete a write to the GASP gate array mailbox.
- The I/O processor could not complete a read of the GASP gate array mailbox.
- The DSP could not complete the analog test or it completed the test but with incorrect results. This consists of three possible conditions:
  - The DSP timed out waiting for the A/D convert to complete.
  - The DSP received an unexpected interrupt.
  - The DSP found one or more of the conversions were out of tolerance.

FN: 85—inc.exc.rsp.—incorrect DSP execute response
FN: EF—inv.dsp.dgn.—invalid DSP diagnose response
Most Probable Cause: ECM

CD—Track Count Error

Error Description: While in the course positioning mode, both gray codes (gray code X and gray code Y) changed during the same servo frame or one gray code changed on two consecutive frames.

FN: 49—trk.ctr.flt.—track counter—gray codes out of quad.
Most Probable Cause: ECM, HDA

E0—Firmware Detected Fault - microprocessor Driver

Error Description: The I/O processor firmware has detected an inconsistency in the microprocessor driver (MCUDRV). The MCUDRV provides the interface to the firmware timer functions and controls and monitors the I/O processor hardware timer.

FN: 01—inc.opr.mode.—incorrect operating mode
FN: 02—inv.pwr.rst.—invalid power on reset
FN: 03—ctr/tmr.flt.—counter/timer test failure
FN: 04—int.ram.flt.—internal RAM test failure
FN: 05—inv.ctr.intr.—invalid or spurious counter interrupt
FN: 06—inv.tmr.intr.—invalid or spurious timer interrupt
FN: 07—inv.cap.intr.—invalid or spurious input capture interrupt
FN: 08—opn.tmr.num.—invalid open timer number
FN: 09—act.tmr.flt.—can't open timer (already active)
FN: 0A—cls.tmr.num.—invalid close timer number
FN: 0B—chk.tmr.num.—invalid check timer number
FN: 0C—get.tmr.num.—invalid get timer number
FN: 0D—mcu.und.flt.—mcudrv module undefined fault
FN: 0E—mcu.und.flt.—mcudrv module undefined fault
FN: 0F—mcu.und.flt.—mcudrv module undefined fault
Most Probable Cause: ECM

E1—Firmware Detected Fault - Test Handler

Error Description: The I/O processor firmware has detected an inconsistency in the test handler (TSTHDR). The TSTHDR controls the drive when and only when it is connected to the test device at the manufacturing plant or a repair center.

FN: 10—inv.tsts.adr.—invalid test memory address number
FN: 11—exp.tst.tmr.—expired test command received timer
FN: 12—inv.tst.byct.—invalid test command packet byte count
FN: 13—inv.tst.opcd.—invalid test command packet opcode
FN: 14—inv.rdm.ofst.—invalid read memory address offset
FN: 15—inv.rdm.byct.—invalid read memory data count
FN: 16—inv.wrm.ofst.—invalid write memory address offset
FN: 17—inv.wrm.byct.—invalid write memory data count
FN: 18—inv.wrm.data.—invalid write memory data (RAM didn't change)
FN: 19—inv.exc.ofst.—invalid execute memory address offset
FN: 1A—inv.exc.byct.—invalid execute memory data count
FN: 1B—emp.exc.buf.—empty execute command buffer (no arguments)
FN: 1C—ful.exc.buf.—full execute response buffer
FN: 1D—inv.fnc.num.—invalid SWI "trap" function number
FN: 1E—tst.und.flt.—tsthdr module undefined fault
FN: 1F—tst.und.flt.—tsthdr module undefined fault
Most Probable Cause: ECM

E2—Firmware Detected Fault - OCP Handler

Error Description: The I/O processor firmware has detected an inconsistency in the OCP driver. This driver provides the interface to the operator control functions and determines what type of device is connected to the drive's remote front panel connector.

FN: 21—rxp.seq.err.—receive packet sequence error
FN: 22—rxp.ovr.run.—receive packet overrun error
FN: 23—inv.syn.byt.—invalid 'sync' byte
FN: 24—inv.rxp.cnt.—invalid receive packet count
FN: 25—rxp.byt.ovr.—receive packet byte overrun
FN: 26—inv.rxp.sum.—invalid receive packet checksum
FN: 27—inv.txp.cnt.—invalid transmit packet byte count
FN: 28—exp.txb.tmr.—expired transmit byte timer
FN: 29—exp.rxb.tmr.—expired receive byte timer
FN: 2A—rxb.frm.err.—receive byte framing error
FN: 2B—rxb.ovr.run.—receive byte over run error
FN: 2C—ocp.und.flt.—ocpdrv module undefined fault
FN: 2D—ocp.und.flt.—ocpdrv module undefined fault
FN: 2E—inv.fls.ers.—invalid flash memory erase
FN: 2F—inv.fls.pgm.—invalid flash memory program
Most Probable Cause: ECM, OCP, SA7x logic

E3—Firmware Detected Fault - OCP Driver

Error Description: The I/O processor firmware has detected an inconsistency in the OCP driver. This driver provides the interface to the operator control functions and determines what type of device is connected to the drive's remote front panel connector.

FN: 30—ocp.flt.num.—invalid OCP logical state
FN: 31—inv.cmd.opc.—invalid command opcode
FN: 32—exp.rxp.tmr.—expired response packet timer
FN: 33—rtx.lst.rsp.—retransmit last response
FN: 34—inv.rsp.cnt.—invalid response packet byte count
FN: 35—inc.rsp.opc.—incorrect response packet opcode
FN: 36—inv.rsp.opc.—invalid response packet opcode
FN: 37—inv.ocp.lck.—invalid OCP interlock
FN: 38—exp.rsp.tmr.—expired response packet timer
FN: 39—rtx.lst.rsp.—retransmit last response
FN: 3A—ocp.und.flt.—ocphdr module undefined fault
FN: 3B—ocp.und.flt.—ocphdr module undefined fault
FN: 3C—ocp.und.flt.—ocphdr module undefined fault
FN: 3D—ocp.und.flt.—ocphdr module undefined fault
Most Probable Cause: ECM, OCP, or SA7x logic

E4—Firmware Detected Fault - Fault Handler

Error Description: The I/O processor firmware has detected an inconsistency in the fault handler. This handler monitors and controls the drive's error logging functions, both internal and external.

FN: 40—inv.drv.flt.—invalid or spurious drive fault
FN: 45—sft.svo.flt.—soft servo fault
Most Probable Cause: ECM

E6—Firmware Detected Fault - Spindle Motor Control Driver

Error Description: The I/O processor firmware has detected an inconsistency in the spindle motor control (SMC) driver. The SMC provides the interface to the drive's spindle motor.

FN: 60—smc.flt.num.—smcdrv module undefined fault
FN: 64—inv.smc.lsn.—invalid spindle motor control logical state number
FN: 65—inv.smc.num.—invalid spindle motor control function number
FN: 66—inv.smc.lck.—invalid spindle motor control lock
FN: 67—inv.smc.flt.—invalid spindle motor control fault
FN: 6A—sup.bkd.flt.—spinup blocked by drive hard or soft fault
FN: 6B—sup.bkd.lsn.—spinup blocked by spin logical state number
FN: 6C—smc.und.flt.—smcdrv module undefined fault
FN: 6D—smc.und.flt.—smcdrv module undefined fault
FN: 6E—smc.und.flt.—smcdrv module undefined fault
Most Probable Cause: ECM, HDA

E7—Firmware Detected Fault - Spindle Motor Control Handler

Error Description: The I/O processor firmware has detected an inconsistency in the spindle motor control (SMC) handler. The SMC controls and monitors the spindle motor functions via the driver.

FN: 74—inc.lhd.rtz.—incorrect load heads return to zero state
FN: 75—inc.lhd.sek.—incorrect load heads seek state
FN: 76—inc.lhd.rcl.—incorrect load heads recalibrate state
FN: 78—exp.spn.tmr.—expired spin timer
FN: 79—inc.spn.psn.—incorrect spin physical state number
FN: 7A—exp.uhd.tmr.—expired unload heads timer
FN: 7B—inc.uhd.psn.—incorrect unloads heads physical state number
FN: 7C—exp.sdn.tmr.—expired spindown timer
FN: 7D—inc.sdn.psn.—incorrect spindown physical state number
FN: 7E—exp.idl.tmr.—expired idle timer
FN: 7F—inc.idl.psn.—incorrect idle physical state number
Most Probable Cause: ECM, HDA

NOTE

If this error occurs on an RA70 disk drive with FN = 7C when the drive is spun down, be sure the ECM revision is J6 or higher (firmware revision 79 or higher).

E8—Firmware Detected Fault - DSP Driver

Error Description: The I/O processor firmware has detected an inconsistency in the DSP driver. This driver provides the interface to the DSP processor via the servo gate array.

FN: 80—dsp.flt.num.—servo detected fault
FN: 86—exp.rmb.tmr.—expired read mailbox timer
FN: 87—inv.rmb.rsp.—invalid read mailbox response opcode
FN: 88—exp.wmb.tmr.—expired write mailbox timer
FN: 89—une.wmb.rsp.—unaccepted write mailbox response
FN: 8A—inc.dma.mode.—incorrect DSP memory mode
FN: 8B—vrf.dsp.mem.—verify DSP memory data
FN: 8C—inc.dsp.bus.—incorrect data bus pattern
FN: 8D—inc.dsp.mbx.—incorrect DSP mailbox pattern
FN: 8E—inc.h/c.num.—incorrect head/cylinder number
FN: 8F—svo.rwr.ast.—servo read/write ready asserted
Most Probable Cause: ECM, HDA

E9—Firmware Detected Fault - DSP Handler

Error Description: The I/O processor firmware has detected an inconsistency in the DSP handler. This handler controls and monitors the servo functions via the driver.

FN: 90—inc.dst.grp.—incorrect destination group (head) number
FN: 91—inv.dsp.lsn.—invalid DSP logical state number
FN: 92—exp.dsp.tmr.—expired DSP state timer
FN: 93—inc.dsp.psn.—incorrect DSP physical state number
FN: 94—inc.dsp.rsp.—incorrect DSP response opcode
FN: 95—inc.dsp.lsn.—incorrect DSP logical state number
FN: 96—inv.svo.head—invalid servo head number
FN: 97—exp.dtn.tmr.—expired detent state timer
FN: 98—inc.dtn.psn.—incorrect detent physical state number
FN: 99—inv.svo.cyl.—invalid servo cylinder number
FN: 9A—exp.rtz.tmr.—expired return to zero state timer
FN: 9B—inc.rtz.psn.—incorrect return to zero physical state number
FN: 9C—inc.rtz.cyl.—incorrect return to zero cylinder number
FN: 9D—exp.sek.tmr.—expired seek state timer
FN: 9E—inc.sek.psn.—incorrect seek physical state number
FN: 9F—inc.sek.cyl.—incorrect seek cylinder number
Most Probable Cause: ECM, HDA

EA—Firmware Detected Fault - SDI Driver

Error Description: The I/O processor firmware has detected an inconsistency in the SDI driver. This driver provides the interface to the controller and the read/write hardware via the SDI gate array.

FN: A6—aut.snd.flt.—auto send mode fault
FN: A7—inv.rsp.byct.—invalid response packet byte count
FN: AA—drv.not.rwr.—drive NOT read/write ready
FN: AF—inc.sct.num.—incorrect/invalid sector number
Most Probable Cause: ECM

EB—Firmware Detected Fault - SDI Driver

Error Description: The I/O processor firmware has detected an inconsistency in the SDI driver. This driver provides the interface to the controller and the read/write hardware via the SDI gate array.

FN: 10—exp.idx.hsw.—expired index/sector pulse timer (head switch)
FN: 11—inv.head.hsw—invalid physical head switch (head switch)
FN: B0—inv.sdi.lsn.—invalid SDI logical state number
FN: BA—exp.idx.tmr.—expired index/sector timer
FN: BD—inv.spu.IRQ.—invalid or spurious IRQ interrupt
FN: BE—inv.head.adr.—invalid physical head address
FN: BF—inv.head.num.—invalid logical head number
Most Probable Cause: ECM

ED—Firmware Detected Fault - SDI Handler

Error Description: The I/O processor firmware has detected an inconsistency in the SDI handler. This handler processes and performs SDI level 2 command packets provided by the SDI driver. In addition, it provides the SDI level 2 response packets to the SDI driver.

FN: D7—inv.cpy.byct.—invalid buffer copy byte count
FN: D8—inc.sub.unt.—incorrect subunit mask bit
FN: DA—drv.hrd.flt.—drive hard fault—CANNOT be cleared
Most Probable Cause: ECM

EE—Firmware Detected Fault - Diagnostic Driver

Error Description: The I/O processor firmware has detected an inconsistency in the diagnostic driver. This driver performs the drive's power on reset diagnostics.

FN: EB—inv.dsp.drv.—invalid DSP driver response
Most Probable Cause: ECM

EF—Firmware Detected Fault - Diagnostic Handler

Error Description: The I/O processor firmware has detected an inconsistency in the Diagnostic handler. This handler performs the drive's spinup diagnostics.

FN: 28—exp.dgn.bwd.—expired diagnostic drive burst write timer
FN: 29—exp.dgn.bwh.—expired diagnostic head burst write timer
FN: 2A—exp.dgn.bwk.—expired diagnostic seek burst write timer
FN: 2B—exp.dgn.erd.—expired diagnostic drive burst write erase timer
FN: 2C—exp.dgn.erh.—expired diagnostic head burst write erase timer
FN: 2D—brt&off.trk— burst write and offtrack
FN: 2F—inv. head.tbl—invalid head table data (on the head track)
FN: DB—exp.dgn.rnd.—expired diagnostic random cylinder state timer
FN: DC—exp.dgn.sng.—expired diagnostic single cylinder state timer
FN: DD—exp.dgn.avg.—expired diagnostic average cylinder state timer
FN: DE—exp.dgn.ful.—expired diagnostic full cylinder state timer
FN: DF—exp.dgn.hsw.—expired diagnostic head switch state timer
FN: F0—inv.dgn.psn.—invalid diagnostic physical state number
FN: F1—inc.dgn.lsn.—incorrect diagnostic logical state number
Most Probable Cause: ECM

F2—Soft Servo Fault

Error Description: The DSP firmware has detected an error.

FN: 4A—svo.grd.bnd.—soft servo fault or inner or outer guard band
Most Probable Cause: ECM, HDA

FD—DSP Reset Failure

Error Description: The DSP is in the reset state and the signal HOLDA L is asserted, or the DSP is in the DMA/HOLD state and the signal HOLDA L is not asserted.

FN: 81—ast.hld.ack.—asserted hold acknowledge from DSP processor
FN: 82—inv.dma.num.—invalid DMA space number
FN: 83—neg.hld.ack.—negated hold acknowledge from DSP processor
Most Probable Cause: ECM

FF—Debug Error Trap

Error Description: This error code is reserved for engineering to test and debug the drive internal firmware operations. Normally this error will not show up in the field.

FN: FF—failed.test.—general failed test
Most Probable Cause: ECM